Selecting Series C Power System

The Series C Power System provides +24 Vdc power to compatible assemblies in one or more cabinet sides.

Series C power system parts

The power systems listed in the following table provide 24Vdc power to compatible assemblies in one or more cabinet sides. Each power system includes the following at a minimum:

- The metal enclosure that holds up to two power supplies and a 24 V backup assembly, if provided.
- An eight-connector interface at the top of the metal enclosure for six 24 Vdc power distribution connectors, one connector interface to C300 Controller memory battery backup assemblies, and one connector interface for power system alarm contacts.

https://maxautoland.com/
Manski Wong manski@cambia.cn
+86 18030205725

Description	Model or Part Number
Standard Power Systems	
Power System (20A), redundant (2 power supplies), 120/240 VAC, with 24V Backup Battery Assembly	CC-PWRB01 (51199940-100)
Power System (20A), redundant (2 power supplies), 120/240 VAC	CC-PWRR01 (51199939-100)
Power Subsystem (20A), non-redundant (one power supply), 120/240 VAC	CC-PWRN01 (51199937-100)
Spare/Loose Items	
24V Backup Battery Rack (no batteries)	51199945-100
24V Backup Battery Kit (3 batteries and interconnecting cables)	51199946-100
20A Power Supply	51199299-100

Model CC-PWRB01 power system

The model CC-PWRB01 power system has two 24 Vdc (20 amperes) output power supplies for redundancy as well as a 24V backup assembly. The battery backup assembly has rechargeable batteries and battery charger to sustain the 24 Vdc (20 amperes) output for up to 30 minutes in the event of an ac power input failure. Each 24 Vdc power supply can be powered by a separate ac power source (ac line or uninterrupted power supply), if desired. The output is 25 to 26 Vdc (20 amperes) while the ac input is present and 24 to 25 (20 amperes) while the battery backup is available.

Model CC-PWRR01 Power System

The model CC-PWRR01 power system only has two 24 Vdc (20 amperes) output power supplies for redundancy and no 24V backup assembly to sustain the 24 Vdc output in the event of an ac power input failure. Each 24 Vdc power supply can be powered by a separate ac power source (ac line or uninterrupted power supply), if desired. The output is 25 to 26 Vdc (20 amperes) while the ac input is present.

Model CC-PWRN01 power system

The model PWRN01 power system only has a single (non-redundant) 24 Vdc (20 amperes) output power supply and no 24V backup battery assembly to sustain the 24 Vdc output of the power system in the event of ac power input failure. The output is 25 to 26 Vdc (20 amperes) while the ac input is present.

24V Backup Assembly

The 24 V backup assembly consists for one battery rack and one 24 V backup battery kit as described in the previous Series C power system parts section. When a 24V backup assembly is included in a power system installed in a cabinet, the battery rack is installed in the cabinet but the battery kit is shipped separately in a box for field installation.

https://maxautoland.com/
Mansk i Wong mansk i@cambia.cn
+86 18030205725

Power Distribution Subsystem

The power distribution subsystem consists of the hardware listed in the following table to distribute 24 Vdc from a Series C power system to one or more CCAs in one or both sides of a cabinet containing the power system.

Description	Model or Part Number
Power Distribution Subsystem (includes the following parts)	51199406-100
Spare/Loose Parts	
DC Power Cable (connects one of the six 24 Vdc power distribution connectors in the 8-connector interface on the subsystem to the Horizontal DC Power Bus Bar (HDPB)), 9-inches (229 mm) long	51202324-100
Horizontal DC Power Bus Bar (HDPB) (includes mounting hardware)	51403896-100
Pair of Red and Black Conductors (Wires) (provide +24 Vdc and 24 Vdc common from the HDPB to one CCA in a cabinet side. Additional pairs are needed to connect to additional CCAs in the same or opposite cabinet side.)	51202335-300

https://mexautoland.com/
Mansk1 Wong mansk1@cambia.cn
+86 18030205725

Horizontal dc power bus bar (HDPB)

The HDPB provides dc power to the tops of up to three (vertical) CCAs (mounted on IOTA Channels) at the top of the cabinet in one cabinet side. the +24 Vdc and 24 Vdc common are provided to IOTAs and their IOMs through two buses (conductors) in each CCA. Each CCA also contains a third bus that serves as a connection point for field wiring shield wires.

If a Series C Power System and HDPB must also power additional CCAs in the other cabinet side of a dual-access cabinet, additional red/black wire pairs (51202335-300) must be added for each vertically-adjacent pair of CCAs in the other cabinet side. The HDPB has three additional terminals for connection of a total of six pairs of red and black wires, so it can support CCAs in both the front and rear sides of a dual-access cabinet, as long as the Power System can provide enough current for both cabinet sides. Otherwise, another Power System and another Power Distribution Subsystem must be used to power the CCAs in the other cabinet side.

C300 Controller Memory Backup

The controller memory backup assembly consists of the following parts and provides up to 50 hours of memory backup to one or two connected C300 Controllers.

Description	Model or Part Number
C300 Memory Backup Assembly (MBA) - For 1 to 2 C300s	CC-SCMB01
C300 Memory Backup Assembly (MBA) - For 2 or more C300s	CC-SCMB02
Spare/Loose Parts	
RAM Charger Assembly	51199932-100
RAM Charger Mounting Assembly (3 inches, 76 mm)	51202340-100
Cable, MBA to one C300 Controller, 30 inches (0.7 m) long	51202330-100
Power cable, MBA to Power System, 55 inches (1.4 m)long	51202331-100
Cable, MBA to one C300 Controller, 84 inches (2 m) long	51202330-200

https://maxautoland.com/
Manski Wong manski@cambia.cn
+86 18030205725

Memory backup assembly cabling guidelines

- You can use the 30-inch (0.7 meter) long cable to connect the MBA to C300, when the RAM charger mounting assembly is mounted adjacent to its associated C300 IOTA on the same CCA. Use the 84-inch (2 m) long cable when the RAM charger mounting assembly is **not** adjacent to its associated C300 IOTA on the same CCA.
- You can connect up to two C300s to the RAM charger mounting assembly using either the 30-inch (0.7 m) or 84-inch (2 m) long cables, as required.
- The 55-inch (1.4 m) long power cable restricts the mounting location of the MBA to the upper CCA on the left side of a cabinet side adjacent to the Series C power system.

Memory backup hold-up times

The following table lists the hold-up time for a fully charged RAM battery charger depending on the number of C300 Controllers that are connected.

Number of C300s	Hold-Up Time in Hours	Hold-Up Time in Days
1	110	4.58

Number of C300s	Hold-Up Time in Hours	Hold-Up Time in Days
2	55	2.23
3	36.6	1.52
4	27.5	1.14

Series C DC Power Connections

The following figure illustrates the typical dc power and battery backup connections made in Series C cabinets. For more information about the components shown in the figure, refer to the previous power system and memory backup sections.

https://maxautoland.com/
Mansk Wong mansk@cambia.cn
+86 18030205725

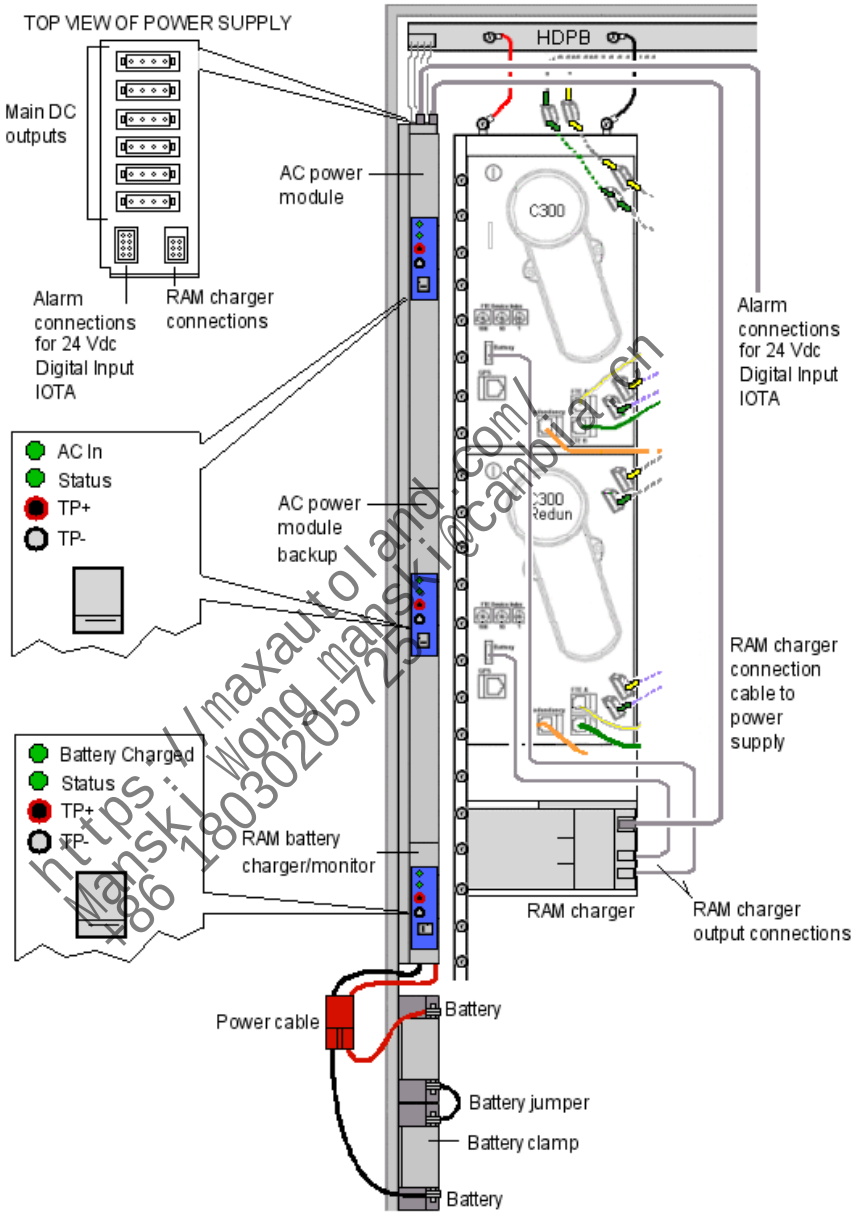

Figure 50 Typical dc power and battery backup connections in Series C cabinet

Series C Power System Indicators

The following table summarizes the Light Emitting Diode (LED) indications provided by the various Series C power system components.

LED Name -Color	LED State		
	OFF	***ON***	***Blinking***
AC Power Module Indicators (per supply)			
AC IN - Green	AC input is lost	AC input is within specified range	N/A
Status - Green	• DC output voltage is out of specifications, • A greater current than specified is being pulled from the power supply, and/or • Power supply has reached temperatures above specified limits.	Power supply output is within specified voltage, temperature, and current limits.	Fan has failed. (This indicator must also be off even if a failed fan in one supply is being *windmilled* by the airflow from the fan in an adjacent supply.)
Main Battery Backup Charger/Regulator/Monitor Indicators			
Status - Green	• DC input is lost, • Battery charger senses an over-voltage on the batteries, • Battery charger senses over-current while charging batteries, • Battery charger senses an over-temperature condition, • Batteries are not	Power supply output is within the specified voltage, temperature, and current limits.	Fan has failed. (This indicator must also be off even if a failed fan in one supply is being *windmilled* by the airflow from the fan in an adjacent supply.)

https://maxautoland.com/
Manski Wong manski@cambia.cn
+86 18030205725

LED Name -Color	LED State		
	present, or • Temperature sensor is missing or not connected.		
Battery Charged - Green	• Main battery is missing or discharged, or • Battery is not at the top-off voltage.	Battery output is capable of supplying the specified output voltage and current for the specified time.	N/A
Ram Battery Backup Charger/Monitor Indicators			
Status - Green	• Main battery is missing, or • Battery is not charged yet	Battery output is capable of supplying the specified output voltage and current for the specified time.	N/A
Note: Alarm opens if : • Battery voltage is less than 3.5 volts, • Input voltage to the charger is less than 14 volts, • Battery pack has been removed, or • Battery is still being charged (not in the top-off state).			

https://maxautoland.com/
Manski_Wong_manski@cambia.cn
+86-18030205725

Series C Power System Alarms

Each power supply and the main battery backup regulator/charger, and the RAM battery backup charger provide an alarm contact. The alarm contact opens if any of the LED indicators listed in the previous section are **not** in the normal (ON) state. The alarm contact is electrically isolated from all other circuitry so that it can be series connected by the user with alarms in other devices.

Use a hermetically sealed electromechanical relay. The alarm contacts are rated for 24 volts ac or dc at 0 to 65 mA non-inductive load. An alarm condition is signaled by an open contact (1000 ohms or more); and a no alarm condition is signaled by a closed contact (10 ohms or less).

LLMUX FTAs Mounting Considerations

The LLMUX FTAs are considered as part of a standard Series C system because they work with the LLMUX IOM as shown in the following figure. The LLMUX FTAs receive power from the LLMUX IOTA and can be mounted in one of the following locations.

- In the same cabinet or cabinet complex.
- In a suitable enclosure up to 1,000 feet remote from the LLMUX IOTA with the restriction that the interconnecting cabling between the IOTA and the FTAs must be routed in a manner consistent with national and local electrical code requirements for the environment (Division 2/Zone 2 hazardous location or nonhazardous location) in which it is routed.

https://maxautoland.com/
Manski Wong manski@cambia.cn
+86 18030205725

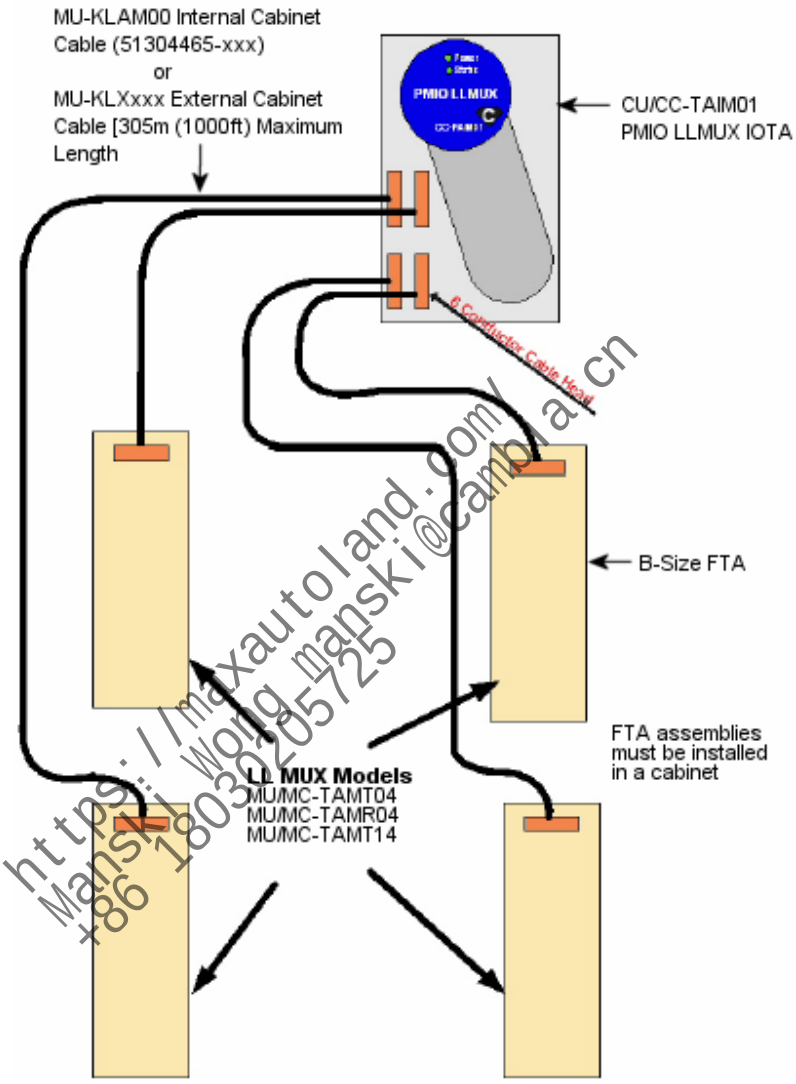

https://maxautoland.com/
Mansk Wong mansk@cambria.cn
+86 18032205725

Figure 51 LLMUX FTA used with Series C LLMUX IOTA

Remote CJR installation considerations

The following figure shows the remote CJR installation requirements. You must use the model MU-KRCJ00 cable to connect the remote CJR sensor to the model MC-TAMT14 FTA. Its length is restricted to 50 meters (164 feet). The cable shield must be connected to Safety Ground at both ends of the cable.

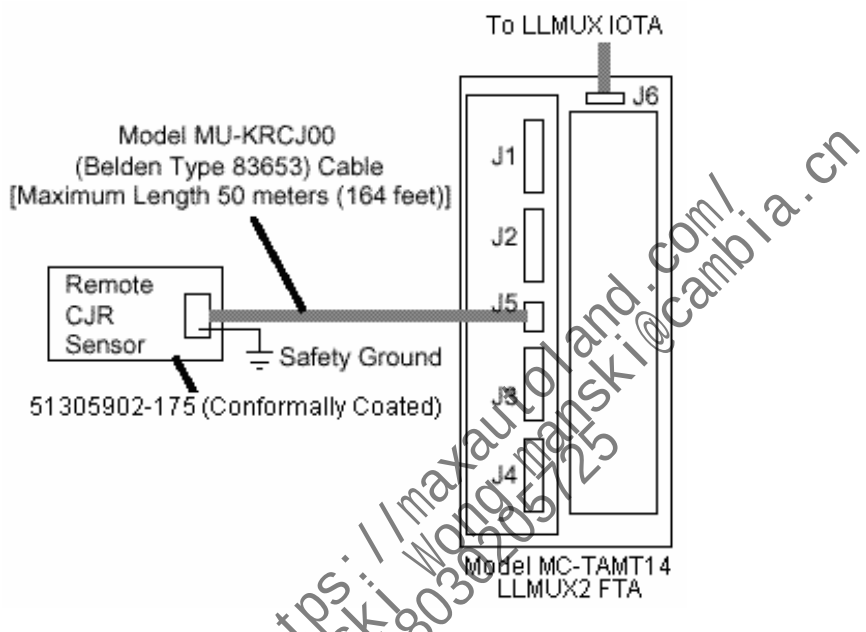

https://maxautoland.com/
Manski Wong manski@cambia.cn
+86 18038205725

Figure 52 Remote CJR sensor connected to LLMUX2 FTA MC-TAMT14

Series C System Cabling

Cable color coding schemes

The following topics show the color and symbols used for the various cables and connectors used in the Series C system

Ethernet connections

Function	Cable Color	Connector Boot Color	Text	Symbol on IOTA
FTE Link A	White	**Yellow**	FTEA	
FTE Link B	White	**Green**	FTEB	
C300 Redundancy	White	**Orange**	REDUNDANCY	
GPS	White	**Black**	GPS	

https://maxautoland.com/
Manski Wong manski@cambia.cn
+86 18030205725

I/O Link Connections

Function	Cable Color	Connector Label Color	Text	Symbol on IOTA
IOLINK1 Link A	**Gray**	**Yellow**	IOL1A	
IOLINK Link B	**Gray**	**Green**	IOL1B	
IOLINK2 Link A	**Violet**	**Yellow**	IOL2A	
IOLINK2 Link B	**Violet**	**Green**	IOL2B	
IOLINK 1 Jumper		**Gray**	(Jumper Number 1 to 40)	
IOLINK 2 Jumper		**Violet**	(Jumper Number 1 to 40)	

https://maxautoland.com/
Manski wang manski@cambia.cn
+86 18030205725

I/O Link Cables

You can connect the following types of I/O Link cables to the redundant I/O Link cable connector ports (IOL1A/B and IOL2A/B) on the C300 Controller IOTA:

- Series C I/O Link (750 KBaud), to support Series C IOMs in their IOTAs
- PM I/O Link (375 KBaud), to support PM IOPs in PM files

Both types always require a pair of cables (Cable A and Cable B). See the previous section about cable color coding schemes.

Series C I/O Link cable types

The following table provides a summary of the types of I/O Link cables that are used in the Series C system.

Cable Name and Type	Description
Header, 3 Drop	The **Header** cable is a multi-drop cable that distributes the I/O Link horizontally to multiple CCAs in a cabinet side or sides. Header cables can be extended to other header cables. Normally, a header cable runs across the top of the cabinet. This cable can be connected to additional cables of the same type to span cabinet sides with or without extension cables.
Header, 6 Drop	This cable can span two cabinet sides in the front and back of the same cabinet or the same side of adjacent cabinets
Drop, Special	The **Drop** cable is a multi-drop cable that runs vertically in a CCA. Two drop cables can be plugged together to distribute the I/O Link in a pair of vertical CCAs. The top connector of the topmost drop cable plugs into a connector on the header cable. There are several configurations of drop cables to handle the three different Series C IOTA dimensions [6-inches (152 mm), 9-inches (229 mm) and 12-inches (305 mm)]. There are many situations where a connector on a drop cable is not used. This occurs primarily when there is a mixture of different size IOTAs in a CCA, or the hardware configuration does not fill the CCA. This cable connects C300s to header and bypasses redundant Control Firewalls above.
Drop, 6 Connections on 6-inch Pitch	Use this cable to connect to non redundant HLAI and AO IOTAs, as well as LLAI IOTAs. Since every other connector is on a 12-inch (305 mm) pitch it can also be used with a mix of 6-inch (152 mm) and 12-inch (305 mm) IOTAs.

https://maxautoland.com/
Manski_Wong_manski@cambia.cn
+86-18051205725

Cable Name and Type	Description
Drop, 4 Connections on 9-inch Pitch	Use this cable to connect to non redundant DI and DO IOTAs.
Drop, 3 Connections on 12-inch pitch	Use this cable to connect to all redundant IOTAs.
Extension, 36 inches	An **extension** cable is used to extend the I/O Link through an area where there are no IOTA connections or to another cabinet side. Extension cables come in a variety of lengths. They can plug into taps on a header cable, the end of a header cable, or the bottom of a drop cable (although this is not a normal use). Extension cables are normally used for three purposes: • To extend a header cable to another cabinet side in a complex; • To by pass the top CCA in a vertical pair (when there are no I/O Link connections in the top CCA); or • To connect to PM I/O in another cabinet side or cabinet. Obviously, there are situations where the length of an extension cable will be non standard (custom). There are no inherent limitations on the length of an extension cable; but there are stringent grounding rules for the I/O Link that restrict where an extension cable can go. As a result, the maximum extension cable length should be 30 feet (9 m) or less. Use this extension to bypass an upper CCA where there are no I/O Link connections. It can also extend a header cable past an adjacent cabinet side where there are no connections needed.
Adapter, to PM	An **adapter** cable is used to connect a Series C extension cable to a PM file. This short cable plugs into Series C extension cable and has the mating connector to plug into a PM file I/O Link connector.
Tap Expander, 1:2	A **tap expander** cable is used to expand a tap (connector) on a drop cable to multiple taps. The most common use is to expand one tap to two. For example, if a 12 inch (305 mm) space is available on CCA and the user wants to install two 6-inch (152 mm) IOTAs and the drop cable has only one connector left, a 1:2 tap expander is used instead of removing the existing drop cable and replacing it with one with more connectors. Expands any connector on a drop cable to 2 connectors that can plug into IOTAs.

https://maxautoland.com/
Manski_Wong_Manski@cambria.cn
+86-18030205725

Series C I/O Link cable parts

Each I/O Link cable is available in an A version (marked yellow) and a B version (marked green). They are normally sold as a pair, since both are needed. The I/O Link 2 (IOL2) cable part numbers have similar tab numbers as the I/O Link 1 (IOL1) cables but with the second digit equal to 1 instead of zero.

Description	Model or Part Number
Series C I/O Link 1 (IOL1) Cable Assemblies	
Gray Header Cable, 3 drops, yellow label (cable A)	51202329-600
Gray Header Cable, 3 drops, green label (cable B)	51202329-601
Cable pair consisting of one each of the preceding two cables	*51202329-602*
Gray Header Cable, 3 drops, daisy-chain, yellow label (cable A)	51202329-604
Gray Header Cable, 3 drops, daisy-chain, green label (cable B)	51202329-605
Cable pair consisting of one each of the preceding two cables	*51202329-606*
Gray Header Cable, 6 drops, yellow label (cable A)	51202329-500
Gray Header Cable, 6 drops, green label (cable B)	51202329-501
Cable pair consisting of one each of the preceding two cables	*51202329-502*
Gray Drop Cable, 3 drops, for channel containing two Control Firewalls (CF9s) plus two C300s plus one 6-inch (152 mm) IOTA, yellow label (cable A)	51202329-300
Gray Drop Cable, 3 drops, for channel containing two CF9s plus two C300s plus one 6-inch (152 mm) IOTA, green label (cable B)	51202329-301
Cable pair consisting of one each of the preceding two cables	*51202329-302*
Gray Drop Cable, 3 drops, 12-inch (305 mm) pitch, yellow label (cable A)	51202329-400
Gray Drop Cable, 3 drops, 12-inch (305 mm) pitch, green label (cable B)	51202329-401
Cable pair consisting of one each of the preceding two cables	*51202329-402*
Gray Drop Cable, 4 drops, 9-inch (229 mm) pitch, yellow label (cable A)	51202329-200
Gray Drop Cable, 4 drops, 9-inch (229 mm) pitch, green label (cable B)	51202329-201
Cable pair consisting of one each of the preceding two cables	*51202329-202*

https://maxautoland.com/
WangWanski@cambia.cn
+86 18030655125

Description	Model or Part Number
Gray Drop Cable, 6 drops, 6-inch (152 mm) pitch, yellow label (cable A)	51202329-100
Gray Drop Cable, 6 drops, 6-inch (152 mm) pitch, green label (cable B)	51202329-101
Cable pair consisting of one each of the preceding two cables	*51202329-102*
Gray Extension Cable, 9-inches (229 mm) long, yellow label (cable A)	51202329-700
Gray Extension Cable, 9-inches (229 mm) long, green label (cable B)	51202329-701
Cable pair consisting of one each of the preceding two cables	*51202329-702*
Gray Extension Cable, 25-inches (635 mm) long, yellow label (cable A)	51202329-704
Gray Extension Cable, 25-inches (635 mm) long, green label (cable B)	51202329-705
Cable pair consisting of one each of the preceding two cables	*51202329-706*
Gray Extension Cable, 36-inches (1 m) long, yellow label (cable A)	51202329-720
Gray Extension Cable, 36-inches (1 m) long, green label (cable B)	51202329-721
Cable pair consisting of one each of the preceding two cables	*51202329-722*
Gray Extension Cable, 48-inches (1.2 m) long, yellow label (cable A)	51202329-724
Gray Extension Cable, 48-inches (1.2 m) long, green label (cable B)	51202329-725
Cable pair consisting of one each of the preceding two cables	*51202329-726*
Gray Tap Expander 1:2, yellow label (cable A)	51202329-800
Gray Tap Expander 1:2, green label (cable B)	51202329-801
Cable pair consisting of one each of the preceding two cables	*51202329-802*
Series C I/O Link 2 (IOL2) Cable Assemblies	
Violet Header Cable, 3 drops, yellow label (cable A)	51202329-610
Violet Header Cable, 3 drops, green label (cable B)	51202329-611
Cable pair consisting of one each of the preceding two cables	*51202329-612*
Violet Header Cable, 3 drops, daisy-chain, yellow label (cable A)	51202329-614
Violet Header Cable, 3 drops, daisy-chain, green label (cable B)	51202329-615

https://maxautoland.com/
Jack Wong Jack@cambria.cn
+86 18030205725

Description	Model or Part Number
Cable pair consisting of one each of the preceding two cables	*51202329-616*
Violet Header Cable, 6 drops, yellow label (cable A)	51202329-510
Violet Header Cable, 6 drops, green label (cable B)	51202329-511
Cable pair consisting of one each of the preceding two cables	*51202329-512*
Violet Drop Cable, 3 drops, for channel containing two CF9s plus two C300s plus one 6-inch (152 mm) IOTA, yellow label (cable A)	51202329-310
Violet Drop Cable, 3 drops, for channel containing two CF9s plus two C300s plus one 6-inch (152 mm) IOTA, green label (cable B)	51202329-311
Cable pair consisting of one each of the preceding two cables	*51202329-312*
Violet Drop Cable, 3 drops, 12-inch (305 mm) pitch, yellow label (cable A)	51202329-410
Violet Drop Cable, 3 drops, 12-inch (305 mm) pitch, green label (cable B)	51202329-411
Cable pair consisting of one each of the preceding two cables	*51202329-412*
Violet Drop Cable, 4 drops, 9-inch (229 mm) pitch, yellow label (cable A)	51202329-210
Violet Drop Cable, 4 drops, 9-inch (229 mm) pitch, green label (cable B)	51202329-211
Cable pair consisting of one each of the preceding two cables	*51202329-212*
Violet Drop Cable, 6 drops, 6-inch (152 mm) pitch, yellow label (cable A)	51202329-110
Violet Drop Cable, 6 drops, 6-inch (152 mm) pitch, green label (cable B)	51202329-111
Cable pair consisting of one each of the preceding two cables	*51202329-112*
Violet Extension Cable, 9-inches (229 mm) long, yellow label (cable A)	51202329-710
Violet Extension Cable, 9-inches (229 mm) long, green label (cable B)	51202329-711
Cable pair consisting of one each of the preceding two cables	*51202329-712*
Violet Extension Cable, 25-inches (635 mm) long, yellow label (cable A)	51202329-714
Violet Extension Cable, 25-inches (635 mm) long, green label (cable B)	51202329-715
Cable pair consisting of one each of the preceding two cables	*51202329-716*

https://maxautoland.com/
Manski Wong manski@cambia.cn
+86 18030205725

Description	Model or Part Number
Violet Extension Cable, 36-inches (1 m) long, yellow label (cable A)	51202329-730
Violet Extension Cable, 36-inches (1 m) long, green label (cable B)	51202329-731
Cable pair consisting of one each of the preceding two cables	*51202329-732*
Violet Extension Cable, 48-inches (1.2 m) long, yellow label (cable A)	51202329-734
Violet Extension Cable, 48-inches (1.2 m) long, green label (cable B)	51202329-735
Cable pair consisting of one each of the preceding two cables	*51202329-736*
Violet Tap Expander 1:2, yellow label (cable A)	51202329-810
Violet Tap Expander 1:2, green label (cable B)	51202329-811
Cable pair consisting of one each of the preceding two cables	*51202329-812*

https://maxautoland.com/
Manski Wong manski@cambia.cn
+86 18030205725

PM I/O Link cables

The PM I/O Link (375 KBaud) cable connects C300 Controller IOTA to PM files containing IOPs. A PM I/O Link **Adapter** cable set connects a standard PM I/O Link cable to an I/O Link port of a C300 Controller IOTA. Then, the other end of the PM I/O Link cable connects to the PM file containing PM IOPs associated with that C300 Controller. See the following section for a list of standard PM I/O Link cable part numbers.

PM I/O Link cable parts

Description	Model or Part Number
PM I/O Link Adapter Cable Pair	51202341-112
I/O Link Cable Set, 2 drops	51195479-100
I/O Link Cable Set, 3 drops	51195479-200
I/O Link Cable Set, 4 drops	51195479-300
I/O Link Cable Set, 5 drops	51195479-400
I/O Link Cable Set, 6 drops	51195479-500
I/O Link Cable Set, 8 drops	51195479-600

https://maxautoland.com/
Manski Wong manski@cambia.cn
+86 18030205725

I/O Link address jumpers

A push-on color-coded (gray or violet) jumper with a printed number (1-40) on it must be installed on each IOTA connected to a Series C I/O Link cable.

I/O Link address jumper kits

One or more of the jumper kits listed in the following table are needed based on whether a system uses I/O Link 1 (IOL1), I/O Link 2 (IOL2), or both cables and which associated range of printed numbers. For example, a Series C system using only IOL1 and addresses 1 to 8 would only need kit part number 51153818-201.

Description	Model or Part Number
I/O Link 1 Jumper Kits	
IOL1 Gray Jumpers 1-10 (contains 51506433-201 through 51506433-210 parts)	51153818-201
IOL1 Gray Jumpers 11-20 (contains 51506433-211 through 51506433-220 parts)	51153818-202
IOL1 Gray Jumpers 21-30 (contains 51506433-221 through 51506433-230 parts)	51153818-203
IOL1 Gray Jumpers 31-40 (contains 51506433-231 through 51506433-240 parts)	51153818-204
I/O Link 2 Jumper Kits	
IOL2 Violet Jumpers 1-10 (contains 51506433-101 through 51506433-110 parts)	51153818-101
IOL2 Violet Jumpers 11-20 (contains 51506433-111 through 51506433-120 parts)	51153818-102
IOL2 Violet Jumpers 21-30 (contains 51506433-121 through 51506433-130 parts)	51153818-103
IOL2 Violet Jumpers 31-40 (contains 51506433-131 through 51506433-140 parts)	51153818-104

https://maxautoland.com/
Manski Wong manski@cambia.cn
+86 18030205725

Ethernet cables

Ethernet cables are used in Series C cabinets to interconnect Control Firewall IOTAs, C300 Controller IOTAs, and Series C FIM IOTAs. Only shielded twisted pair (STP) type cable is used. The use of unshielded twisted pair (UTP) cable is not allowed.

C300 Controller redundancy cable parts

One of the following Ethernet cables with orange end-boots is used to connect one C300 Controller IOTA to its partner C300 Controller IOTA in a redundant pair of C300 Controllers. The 36-inch (1 m) length cable is the default length used to interconnect partner IOTAs that are located vertically adjacent to each other on the same CCA. Other lengths are used when the partner IOTAs are not mounted close together.

Description	Model or Part Number
Ethernet Redundancy Cable, STP CAT5, orange boots, 36 inches (1 m) long	51305980-836
Ethernet Redundancy Cable, STP CAT5, orange boots, 48 (1.2 m) inches long	51305980-848
Ethernet Redundancy Cable, STP CAT5, orange boots, 60 (1.5 m) inches long	51305980-860
Ethernet Redundancy Cable, STP CAT5, orange boots, 84 inches (2 m) long	51305980-884

https://maxautoland.com/
Manski Wang manski@cambia.cn
+86 18030205725

Other in-cabinet Ethernet cable parts

One of the following yellow-colored (FTEA) cables and one of the following green-colored (FTEB) Ethernet cables are used to connect a Control Firewall IOTA to a C300 Controller IOTA or to a Series C FIM IOTA.

Description	Model or Part Number
FTE Link A Cables	
FTEA Ethernet Cable, STP CAT5, Yellow, 24 inches (610 mm) long	51305890-124
FTEA Ethernet Cable, STP CAT5, Yellow, 36 inches (1 m) long	51305890-136
FTEA Ethernet Cable, STP CAT5, Yellow, 48 inches (1.2 m) long	51305890-148

Description	Model or Part Number
FTEA Ethernet Cable, STP CAT5, Yellow, 60 inches (1.5 m) long	51305890-160
FTEA Ethernet Cable, STP CAT5, Yellow, 84 inches (2 m) long	51305890-184
FTE Link B Cables	
FTEB Ethernet Cable, STP CAT5, Green, 24 inches (610 mm) long	51305890-224
FTEB Ethernet Cable, STP CAT5, Green, 36 inches (1 m) long	51305890-236
FTEB Ethernet Cable, STP CAT5, Green, 48 inches (1.2 m) long	51305890-248
FTEB Ethernet Cable, STP CAT5, Green, 60 inches (1.5 m) long	51305890-260
FTEB Ethernet Cable, STP CAT5, Green, 84 inches (2 m) long	51305890-284

LLMUX FTA cables

As previously defined in the *LLMUX FTA Mounting Considerations* section, the LLMUX FTA is connected through a cable to the Series C LLMUX IOTA.

LLMUX FTA cable parts

Description	Model or Part Number
LLMUX FTA to LLMUX IOTA cable (in-cabinet)	51304465-XXX
LLMUX FTA to LLMUX IOTA cable (outside cabinet)	MU-KLXxxx
LLMUX FTA to LLMUX IOTA cable (outside Cabinet) - Optional	MU-KLO305
Remote CJR Sensor to Model MC-TAMT14 LLMUX FTA cable	MU-KRCJ00

Cable 51304465-XXX reference

Use this cable to connect the LLMUX FTA to the Series C LLMUX IOTA within the same cabinet or cabinet complex. The cable has two individually shielded, twisted-pair wires. Connect the shields to ground at both ends of the cable. The following table lists general cable specifications for reference.

Manufacturer Type	Belden 9406

https://maxautoland.com/
Manski_Wong_manski@cambia.cn
+86 18030205725

Configuration	Shielded double pair
Flame Resistance Conformity	CSA FT 4
CSA Type	CMG
NEC Type	CMG
Available Lengths (xxx represents)	033, 066, 100, 200, or 300 centimeters (12, 25, 39, 78, or 118 inches)

Cable MU-KLXxxx reference

Use this cable to connect the LLMUX FTA to the Series C LLMUX IOTA located in a remote cabinet up to 305 meters (l,000 feet) away. It can be used for Intrinsically Safe, Nonincendive, and nonhazardous applications. The cable is a single-twist, four-conductor cable with a braided shield. Connect the shield to ground at both ends of the cable. The following table lists general cable specifications for reference.

https://maxautoland.com/
Manski Wong manski@cambia.cn
+86 18030205725

Manufacturer Type	Belden 83654
Configuration	Shielded 18-gauge four-conductor single twist (TEFLON jacket)
Flame Resistance Conformity	CSA FT4/FT6 and UL910
CSA Type	CMP
NEC Type	CMP
Temperature Rating	-70 to +200 degrees C (-94 to +392 degrees F)
Available Lengths (xxx represents)	076, 152, or 300 meters (249, 499, or 985 feet))

Cable MU-KLO305 reference

Use this optional cable to connect the LLMUX FTA to the Series C LLMUX IOTA located in a remote cabinet up to 305 meters (l,000 feet) away. The cable tolerates moisture from normal precipitation, but must not be submerged and is not suitable for direct burial in this application. The cable is a single-twist, four-conductor cable with a braided shield and armored jacket. Connect the shield to ground at both ends of the cable. The following table lists general cable specifications for reference.

Manufacturer Type	Belden YC41926
Configuration	Shielded, 12-gauge, four-conductor, single twist (armored jacket) CE Compilant PLTC or ITC, 300 volts
Vertical Tray Flame Test	UL1581/IEEE383
Temperature Rating	-30 to +90 degrees C (-22 to +194 degrees F)
Available Length	305 meters (1,000 feet))

Cable MU-KRCJ00 reference

Use this cable to connect the model MC-TAMT14 LCMUX FTA to the remote CJR sensor up to 50 meters (164 feet) away. Connect the cable shield to Safety Ground at both ends of the cable. The following table lists general cable specifications for reference.

Manufacturer Type	Belden model 83653
Configuration	Three 1.0 mm 2 (18 AWG) conductors
Insulation and Jacket	Teflon conductor insulation and jacket
Shielding	Braid over foil
Flame Resistance Conformity	CSA PCC FT4/FT 6 and UL910
Temperature Rating	-30 to +90 degrees C (-22 to +194 degrees F)
Use	Air Plenum
NEC Type	CMP
Available Length	50 meters (164 feet)

https://maxautoland.com/
Mansk1 Wong mansk@cambia.cn
+86 18030205725

DO relay extension cables

A DO relay extension cable connects between a DO Relay IOTA and its associated DO Relay Extension IOTA that contains relays.

DO relay extension cable parts

The DO relay extension cable is available in the lengths listed in the following table. The 3-feet (1 m) long cable is used when the DO Relay Extension IOTA is mounted in its default location immediately below its associated DO Relay IOTA. Longer cables are available for configurations where the DO Relay Extension IOTA is not mounted in its default location. The DO Relay Extension cables are allowed to leave the cabinet or cabinet complex.

https://maxautoland.com/
Manski Wong manski@cambia.cn
+86 18030205725

Description	Model or Part Number
DO Relay Extension Cable – length is to be determined	CC-KREB00
DO Relay Extension Cable - 0.5M (1.6 ft)	CC-KREBR5
DO Relay Extension Cable - 1M (3 ft)	CC-KREB01
DO Relay Extension Cable - 2M (6.5 ft)	CC-KREB02
DO Relay Extension Cable - 5M (16 ft)	CC-KREB05
DO Relay Extension Cable - 10M (33 ft)	CC-KREB10
DO Relay Extension Cable - 20M (66 ft)	CC-KREB20
DO Relay Extension Cable - 30M (98 ft)	CC-KREB30
DO Relay Extension Cable - 40M (131 ft)	CC-KREB40
DO Relay Extension Cable - 50M (164 ft)	CC-KREB50

Fieldbus power conditioner cables

A Fieldbus power conditioner cable connects between a Series C FIM IOTA and its associated Fieldbus power conditioner.

Fieldbus power conditioner cable parts

The cables listed in the following table are used with the Fieldbus power conditioner and are available from the vendor MTL-Relcom.

Description	MTL-Relcom Model
Fieldbus Power Conditioner Cable - 30 cm (1 ft)	FCAB-05
Fieldbus Power Conditioner Cable - 1 m (3 ft)	FCAB-06
Fieldbus Power Conditioner Cable - 2 m (6.5 ft)	FCAB-07
Fieldbus Power Conditioner Cable - 4 m (13 ft)	FCAB-08

Other Fieldbus power conditioner parts

The following table lists other Fieldbus power conditioner parts that are available from the vendor MTL-Relcom.

Description	MTL-Relcom Model
F660A Power Conditioner Parts	
Alarm Module	F660A-ALM
Unpopulated IOTA	F660A-C
Fieldbus Power Module	FPS-IPM
Blanking Module (pack of 10)	FPS-BLK10
F860 Power Conditioner Parts	
Unpopulated IOTA	F860-C
Eight-Segment Power Module	F801

https://maxautoland.com/
Mansk Wong mansk@cambia.cn
+86 18030205725

Agency Approvals for Series C Cabinets

Agency approval labels can be applied to the cabinet by the Honeywell factory prior to but not after system shipment.

Inclusion of third-party products or Honeywell models not previously identified voids all agency approvals. The cabinet may only be labeled with a generic, no agency approval, Honeywell label.

https://maxautoland.com/
Manski Wong manski@cambia.cn
+86 18030205725

Series C Hardware Attributes

Power draw and heat dissipation ratings for Series C components

The following table lists the power draw in amperes and heat dissipation in watts for the given Series C component model. Please refer to the *Power Draw for IOP* section in *Appendix E* for information about PM I/O.

Model Number	Description	Current (Amps @ 24 Vdc)	Heat Dissipation (Watts)
CC-PWRN01	Power system (one supply, no 24 Vdc backup)	-	125
CC-PWRR01	Power system (2 supplies, no 24Vdc backup)	-	145
CC-PWRB01	Power system (2 supplies + 24Vdc backup)	-	145
CC-PCNT01	C300 Controller, non-redundant	0.319	7.975
CC-TCNT01	C300 Controller IOTA	0	0
CC-SCMB01	C300 Memory Backup Assembly	0.010	0.100
CC-PFB401	Series C Fieldbus Interface Module (FIM4)	0.212	5.300
CC-TFB401	FIM4 IOTA	0	0
CC-TFB411	FIM4 IOTA Redundant	0	0
CC-SFPR01	Fieldbus Power Conditioner IOTA Redundant (MTL)	0.600	5.00
CC-PCF901	Control Firewall	0.150	3.750
CC-TCF901	Control Firewall IOTA	0	0
CC-FSMx01	FTE Single Mode Fiber Module (Plugs into one port of Control Firewall IOTA.)	0.040	1.00
CC-FMMx01	FTE Multi-Mode Fiber Module (Plugs into one port of Control Firewall IOTA.)	0.040	1.00
Series C I/O Modules and IOTAs			

https://maxautoland.com/
Manski Wang manski@cambia.cn
+86 18030205725

Model Number	Description	Current (Amps @ 24 Vdc)	Heat Dissipation (Watts)
CC-PAIH01	High-level AI HART IOM	0.195	3.972
CC-TAIX01	AI IOTA	0.320	2.464
CC-TAIX11	AI IOTA Redundant	0.320	2.464
CC-PAOH01	Analog Output HART IOM	0.461	8.492
CC-TAOX01	AO IOTA	0	0.606
CC-TAOX11	AO IOTA Redundant	0	0.606
CC-PDIL01	Digital Input 24V IOM	0.095	2.700
CC-TDIL01	DI 24V IOTA	0.190	4.220
CC-TDIL11	DI 24V IOTA Redundant	0.190	4.220
CC-PDIH01	Digital Input High Voltage IOM	0.050	1.180
CC-TDI110	DI 110 VAC IOTA	0	3.650
CC-TDI120	DI 110 VAC IOTA Redundant	0	3.650
CC-TDI220	DI 220 VAC IOTA	0	7.330
CC-TDI230	DI 220 VAC IOTA Redundant	0	7.330
CC-PDOB01	Digital Output 24V Bussed Out IOM	0.070	5.680
CC-TDOB01	DO 24V Bussed Out IOTA	0	3.900
CC-TDOB11	DO 24V Bussed Out IOTA Redundant	0	3.900
CC-TDOR01	DO Relay IOTA	0	0
CC-TDOR11	DO Relay IOTA Redundant	0	0
CC-SDOR01	DO Relay Extension Board	0.147	3.865
CC-PAIM01	PMIO LLMUX IOM	0.076	1.900
CC-TAIM01	PMIO LLMUX IOTA	0	0
CC-TAIM21	PMIO LLMUX IOTA with Power Adaptor	0	0

https://maxautoland.com/
Manski Wong manski@cambia.cn
+86 13030205725

Series C Hardware Grounding Considerations

Grounding considerations in this section apply to Experion systems that include:

- C300 Controllers with Series C I/O,
- C300 Controllers with Series C I/O and Process Manager I/O,
- C300 Controllers that replaced C200 Controllers being used with Process Manager I/O, and
- C300 Controllers that replaced High Performance Process Manager (HPM) controllers with Process Manager I/O.

Grounding basics

Electrical systems must be connected to ground to:

- Protect personnel from electric shock,
- Protect equipment from damage,
- Protect site from lightning damage, and
- Insure the reliability and electrical integrity of the system.

To satisfy all of these requirements, a system may require multiple ground systems. A ground system is a series of rods driven into the earth or a grid system to connect to true earth. Building frames, equipment housings, instrument signals and lightning terminals are connected to these ground rods with appropriately sized wire.

https://maxautoland.com/
Manski Wong manski@cambia.cn
+86 18030205725

Types of Grounding Systems

The following grounding systems are used for distributed control areas and are described in the following paragraphs.

- AC Safety Ground
- Supplementary Ground
- Master Reference Ground
- Lightning Ground

AC Safety Ground System (mains ground)

The safety ground protects the plant power system, electrical equipment, and personnel from electric shock. All metal equipment and enclosures are connected to this system

through the ground wire. If insulated, the ground wire color is normally green. The ground wire and neutral wire are connected to the mains ground rods or grid located where the power enters the building or job area as shown in the following figure.

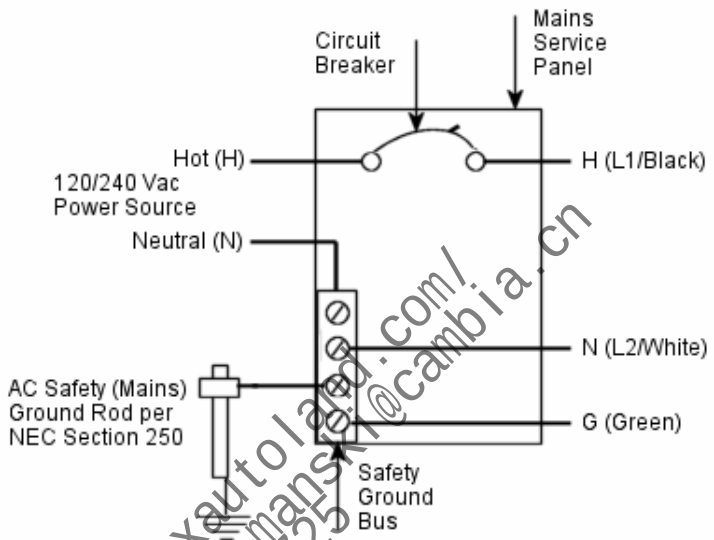

Figure 53 Typical AC power source through mains panel with safety ground bus and AC safety (mains) ground rod.

https://maxautoland.com/
Manski wong manski@cambia.cn
+86 18030205725

Supplementary Ground System

In accordance with NEC section 250.54, supplementary grounding electrodes can be used to connect to equipment grounding conductors. The supplementary ground can serve as the termination point for all common leads, as shown in the following illustration.

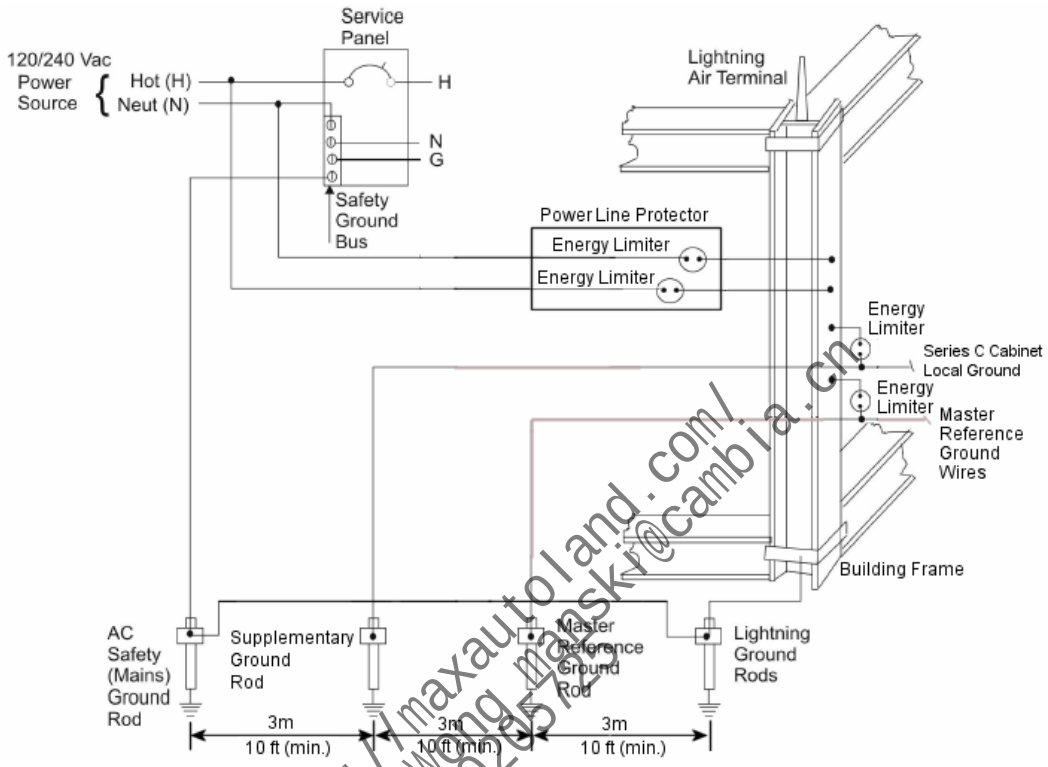

Figure 54 Typical AC power source through mains panel with safety ground bus, AC safety (mains) ground, supplementary ground, master reference ground, and lightning ground rods.

https://maxautoland.com/
Manski Wong manski@cambia.cn
+86 18030205125

Master Reference (signal common) Ground System

The Master Reference Ground (MRG) is **not** used with Experion systems. It has been used in existing TPS installations including Process Manager I/O cabinets. There is no need to replace this ground, if it is present in an existing Process Manager I/O cabinet installation that is being adapted for use with an Experion Series C cabinet.

The MRG serves as the reference point for all signals. All common leads terminate at this point. Bus bars and wire shields are all connected to this ground. To maintain system reliability and electric integrity, the resistance to true earth should be less than five ohms for general purpose area installations. The master reference ground rods or grid are isolated from the safety and lightning ground rods to eliminate any noise at the signal reference point, as shown in the previous figure.

Lightning Ground System

The lightning ground system safely dissipates lightning energy to protect personnel and the structure. Lightning energy is intercepted by air terminals and/or the building frame and conducted through cable to the ground rods or grid. Lightning system ground rods are connected to mains ground rods (safety ground) to prevent arcing to the building, as shown in the previous figure.

Energy limiter for dissimilar grounds

Electrical codes do allow more than one grounding system, such as safety ground and master reference ground, in a building as long as there are devices which can automatically connect the two grounds together in case of a lightning strike or the presence of a differential voltage greater than 90 volts. We recommend the use of a commercially available energy limiter device called a *Spark Gap*.

Isolation

Power line noise saturates the entire area around the safety (mains) ground rods. To prevent this noise from affecting the supplementary or master reference ground, separate it from the mains ground. The preferred arrangement is to install the mains ground and instrument grounds on opposite sides of the control area. If this is not practical, separate all ground rod systems by at least 3 meters (10 feet).

Codes and references

Ground rod systems must conform to local and national standards. Specific recommendations for design and installation of ground systems are contained in such technical publications as:

- NFPA - 70
- IEE - 142
- Manual on installation of Refinery Instruments and Control Systems: API RP 550
- Lightning Protection Institute Installation Code LPI-175

https://maxautoland.com/
Manski Wong manski@cambia.cn
+86 18030205725

Two AC power sourcing methods

You can use one of the following methods to provide separate AC power sources for an Experion subsystem.

Method 1

This method takes advantage of the redundant power supply option. The two power supplies can be wired to operate from two separate AC feeder sources. The two AC feeder sources do not have to be of the same phase, frequency, voltage, or from the same service as long as each meets the power quality requirements.

Method 2

This method uses an automatic transfer switch to provide two AC feeder sources. It does not require redundant power supplies or dual AC feeders because the transfer switch provides only one AC output. The automatic transfer switch can detect an AC failure and execute a transfer of its load from one service to another in 5 milliseconds. The Experion controller will perform without compromise even if this cycle requires 10 milliseconds.

Series C cabinet safety ground connections

The following illustration and callout table identify typical safety ground connections in the Series C cabinet. For Honeywell assembled cabinets, all power and ground connections within the cabinet are made by Honeywell manufacturing. The drawing is not to scale nor are component positions representative of actual mounting locations within the cabinet.

https://maxautoland.com/
Manski Wong manski@cambia.cn
+86 18030205725

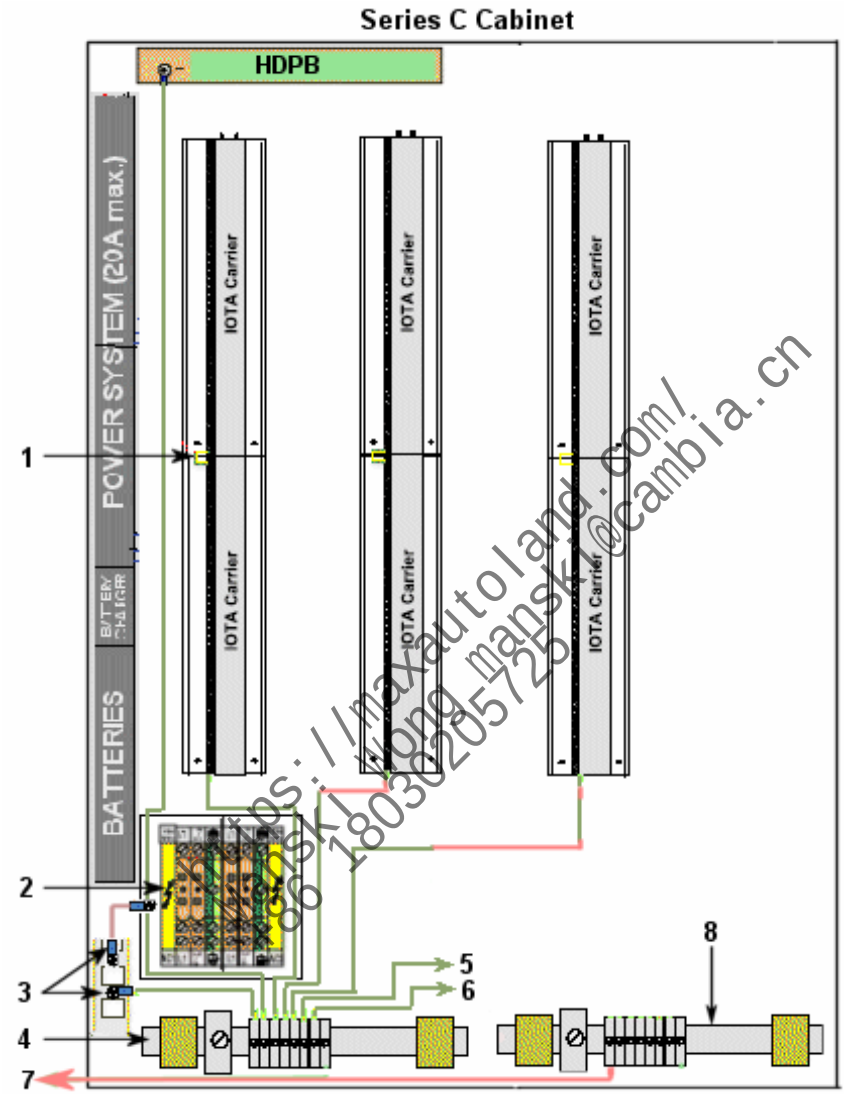

Figure 55 Typical safety ground connections in Series C cabinet

Table 4 Callout descriptions for previous figure

Callout	Description
1	The upper and lower carrier channel assembly shield landing bus bar grounds are jumpered together in the center and the lower shield landing bus bar ground is connected to the AC safety ground bar. Accepts user supplied single or dual AC line power input - Hot (L1), Neutral (L2), and Ground (AC Safety ground).
2	The AC terminal block and mounting plate for routing power and making safety ground connections within the cabinet is mounted on the cabinet floor. See the following figure for details about typical power and ground connections.
3	The AC safety ground bar and the AC terminal block mounting plate are connected to the cabinet frame.
4	The AC safety ground bar is mounted to the cabinet frame.
5	To cabinet front or rear AC safety ground bar if required.
6	To cabinet complex front or rear AC safety ground bar as required.
7	To supplementary ground connection, if required.
8	The Local ground bar is mounted to the cabinet frame, if required.

https://maxautoland.com/
Manski Wong manski@cambia.cn
+86 18030205725

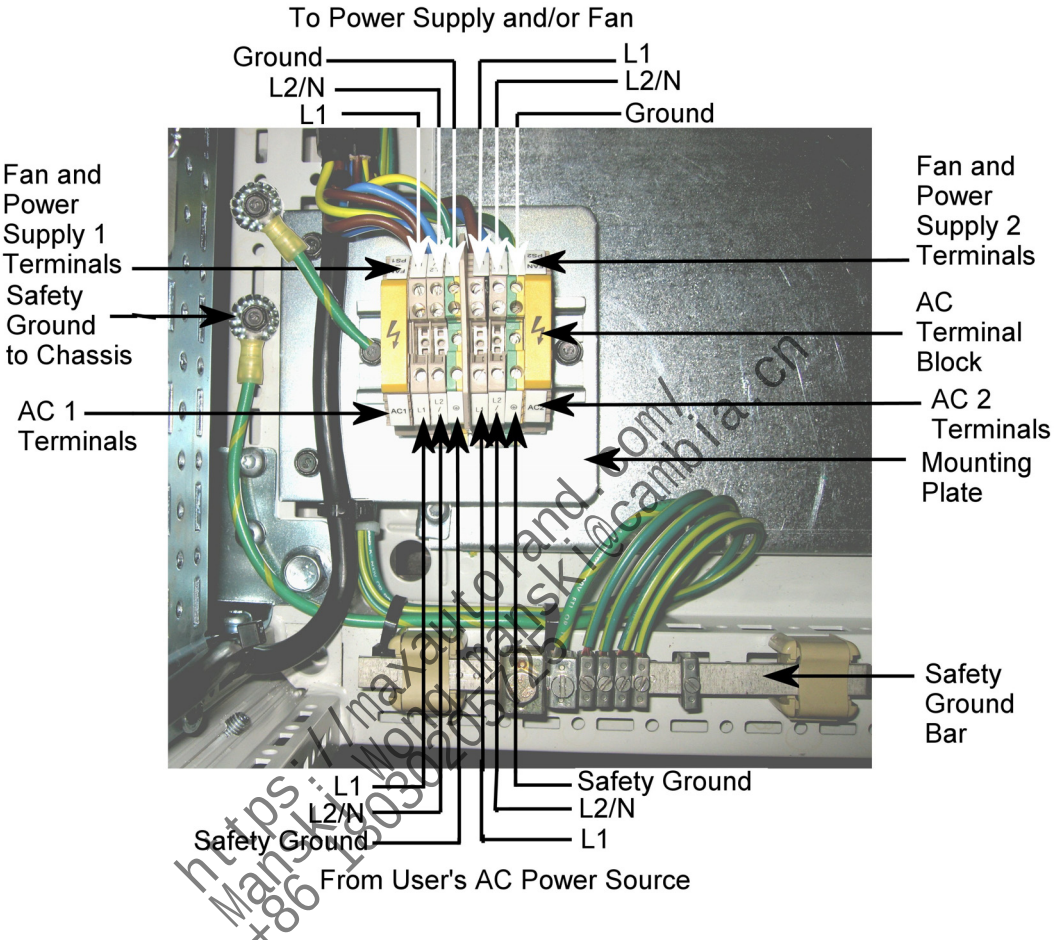

Figure 56 Typical power and ground connections to AC terminal block in Series C cabinet

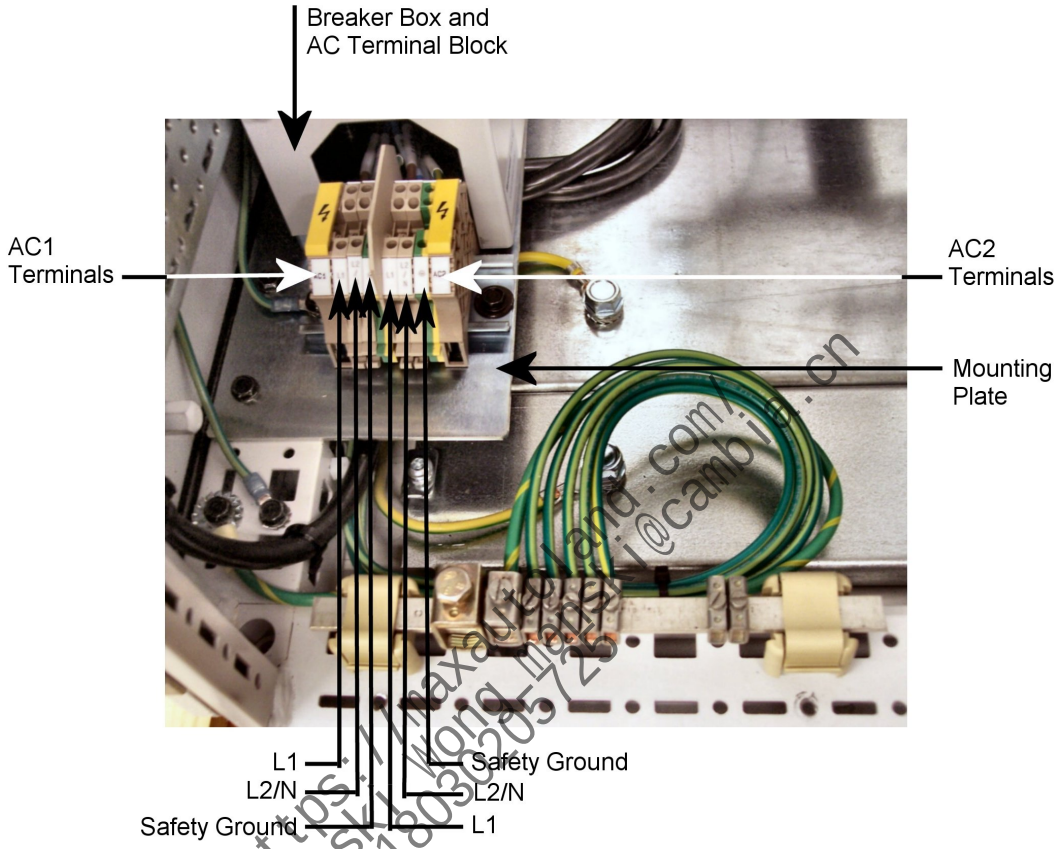

Figure 57 Typical power and ground connections to optional breaker box and AC terminal block in Series C cabinet

https://maxautoland.com/
Manski Wong Manski@cambia.cn
+86 18030205725